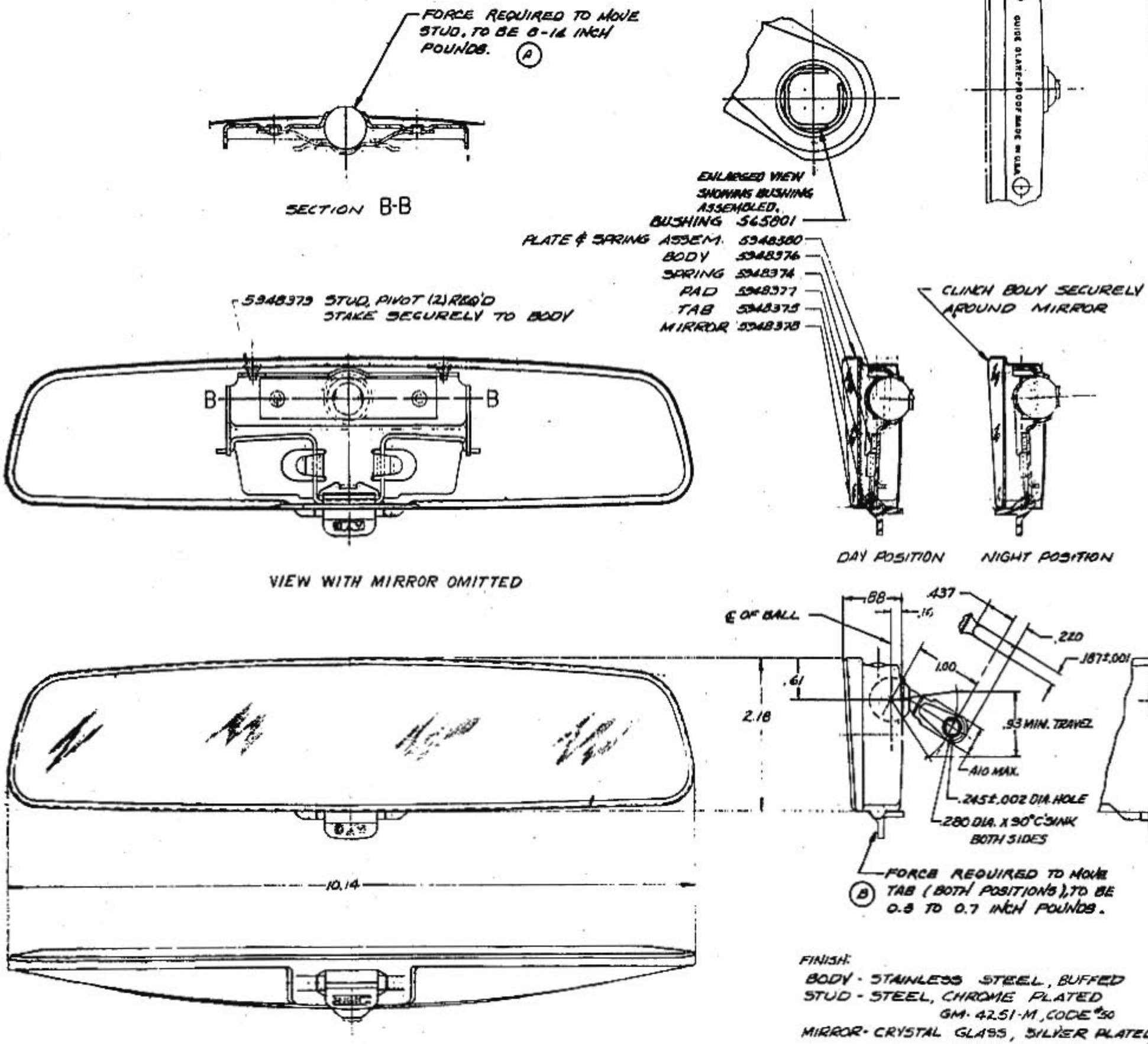

FINISH:
BODY - STAINLESS STEEL, BUFFED
STUD - STEEL, CHROME PLATED GM-4251-M, CODE #50
MIRROR - CRYSTAL GLASS, SILVER PLATED REAR SURFACE
TAB - BLACK NYLON (LETTERS BLACK, WHITE BACKGROUND)

DATE	SYM.	REVISION RECORD	AUTHORITY	DR.	CK.
6-28-57		RELEASED	10598		
8-10-59	A	STUD "FORCE" NOTE ADDED	18656		
8-10-59	B	TAB "FORCE" NOTE ADDED	18656		

MODEL NO. 191-24 PART NO. 898935

TOLERANCES UNLESS OTHERWISE SPECIFIED: 2 PLACE DECIMALS ± .02; 3 PLACE DECIMALS ± .010; ANGULAR ± 1°

DWG. DATE 6-24-57 SCALE FULL DR. [illegible] CK. [illegible] APPR. [illegible] APPR. [illegible] APPR.

FIRST USED

REFERENCE AMERICAN MOTORS DWG. #425626 [illegible] (191-02)

FINISH SPEC.

MATERIAL SPEC.

NAME REAR VIEW MIRROR ASSEMBLY (GLARE-PROOF)

MODEL NO. 191-24 PART NO. 898935

(A) (B)